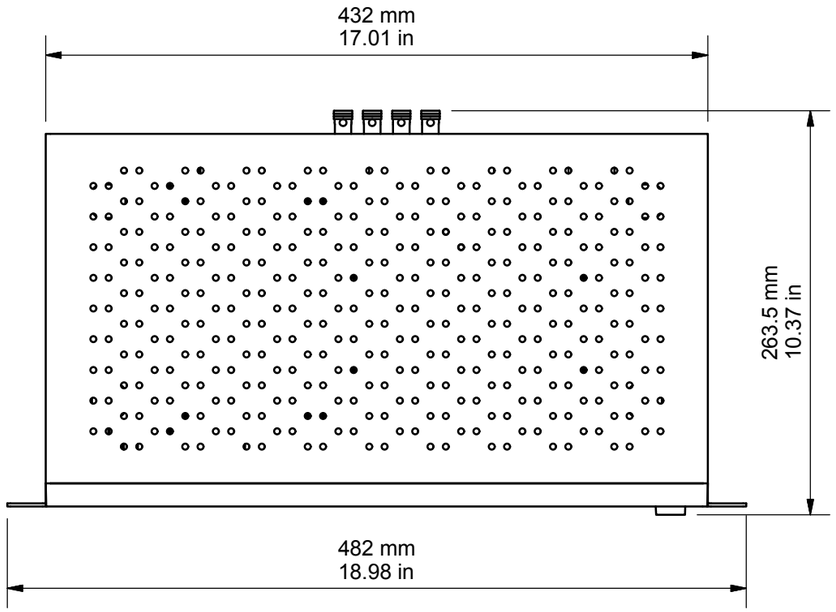

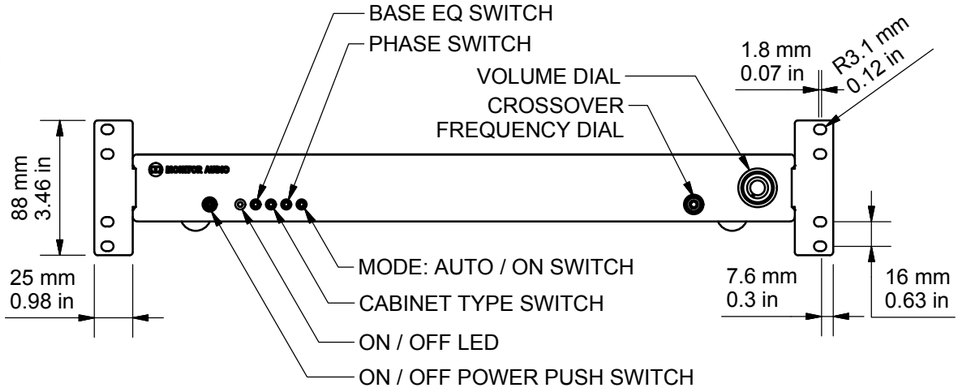

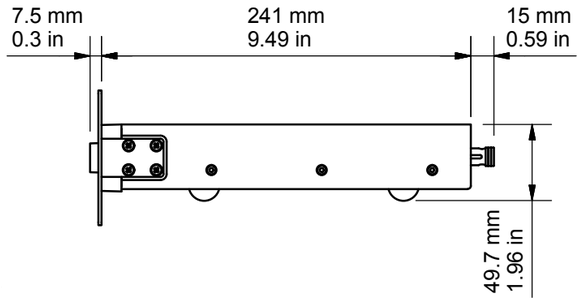

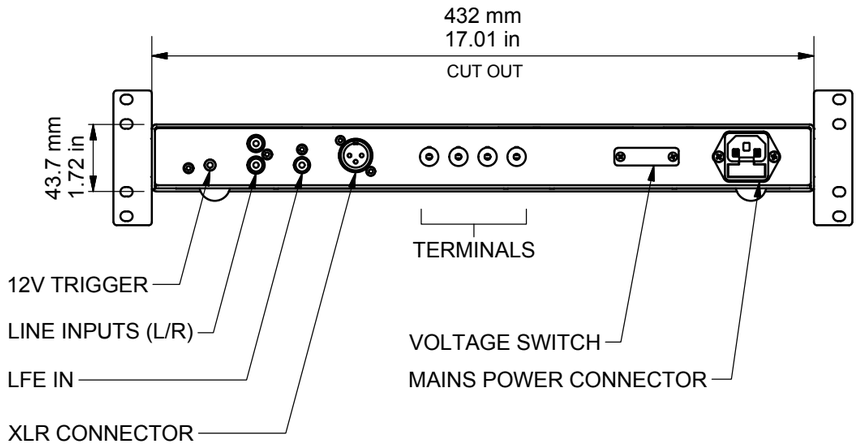

IWA-250

MONITOR AUDIO

RANGE: INWALL SUBWOOFER

© COPYRIGHT MONITOR AUDIO

06/05/2015

3RD ANGLE